KIT SILICONA / KIT SILICONE / KIT SILICONE / KIT SILICONE / KIT SILICONE

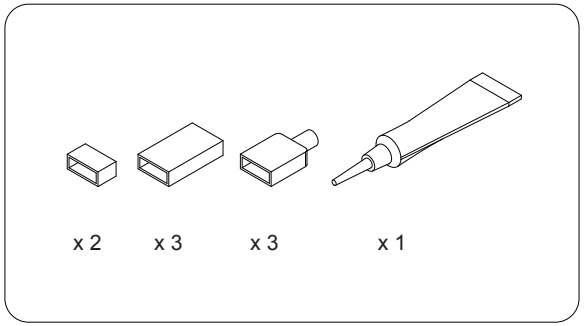

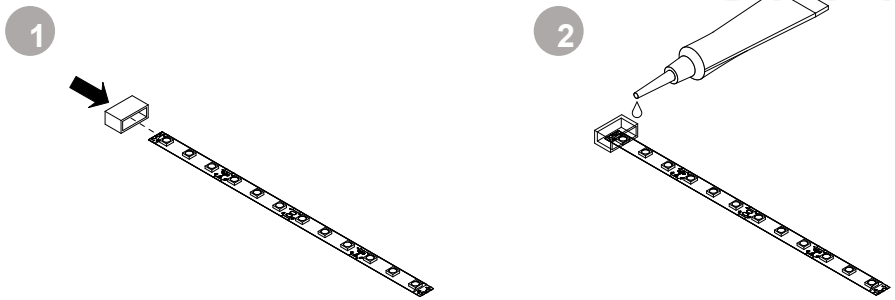

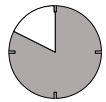

10 h

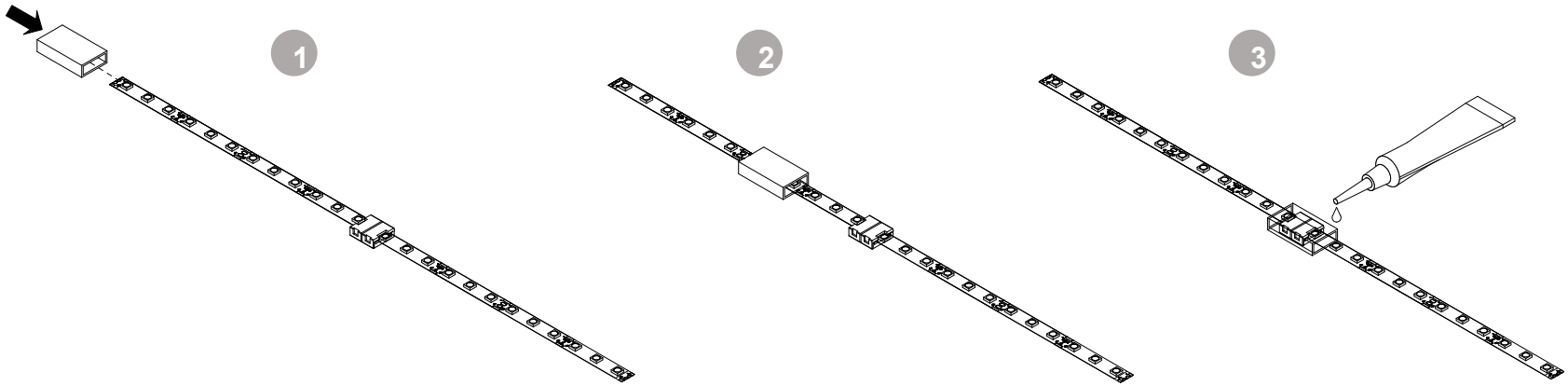

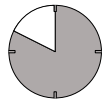

10 h

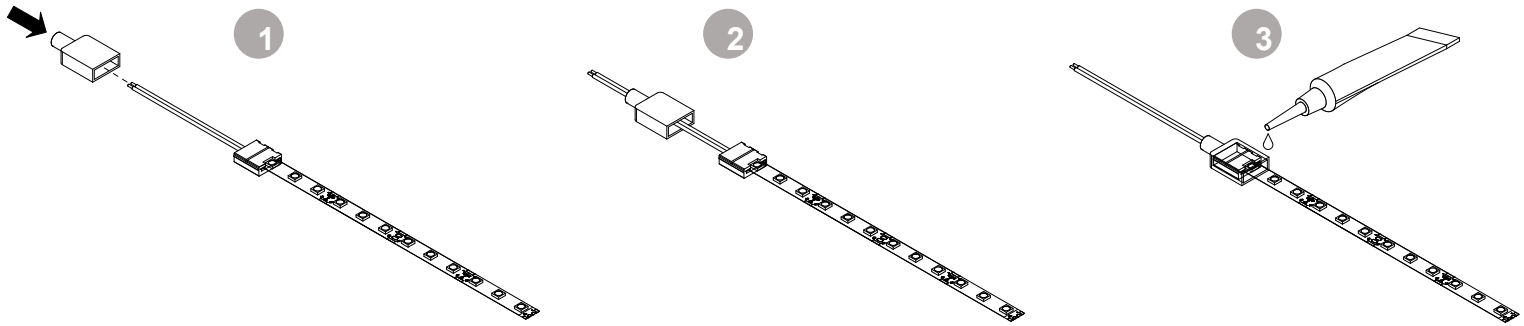

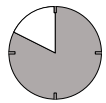

10 h

EMUCA, S.A.
Valencia (España)
Tel: +34 96 166 70 19
Fax: +34 96 166 71 82

EMUCA, S.r.l.
Padova (Italy)
Tel: 0039+ 0498702800
Fax: 0039+ 0498703019

EMUCA, Ltd.
Basildon ESSEX (United Kingdom)
Tel: +44 1268 530674
Fax: +44 1268 828592

EMUCA, Sarl.
Nantes (France)
Tel: +33 02 49880735

EMUCA, Lda.
Lisboa (Portugal)
Tel: +351 211 203 940
Fax: +34 96 166 71 82